PROGRESSIVE DESK

Model: RT-16 ***Data Sheet***

V1.01

Dimensional Drawing

(Dimensions in Inches)

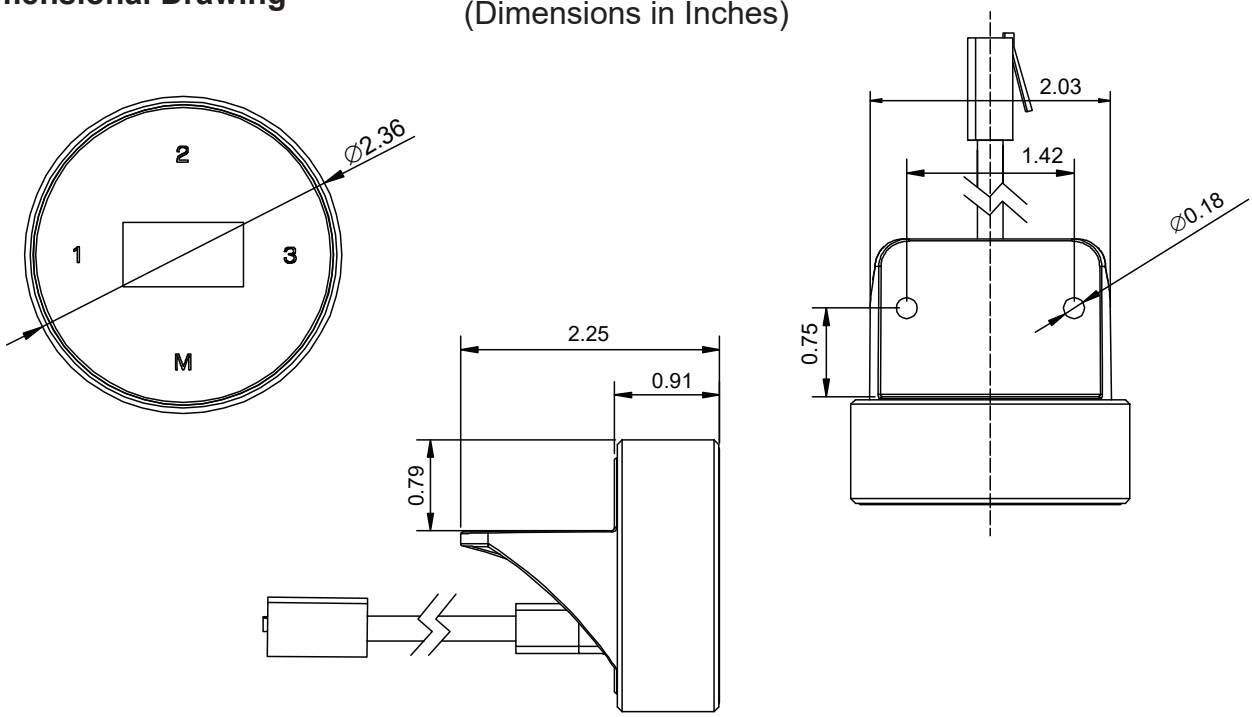

Features

1. OLED height display
2. Touch screen buttons (3 preset buttons, 1 memory button)
3. Rotational up and down movement control
4. Sedentary Alarm
5. Upper and lower limit adjustment
6. Remote locking

Controls

Basic Movement - To move the table lift up, rotate in the clockwise direction, to move down, rotate in the counter-clockwise direction.

Preset Positions - Once in the desired position, press the 'M' button followed by a number.

Locking - Press and hold the 'M' button until the menu appears. Navigate to the 'Lock' icon and press 'M' to activate. It will take 10 seconds for lock to activate.

Unlocking - Once the lock is activated, press '1', '2', '3' to temporarily unlock the remote for adjustments. After 10 secs of being idle the remote will lock again. To turn the lock mode off, press and hold the 'M' button until the menu appears. Navigate to the "Lock" icon and press 'M' to deactivate. The unlocking symbol will appear.

Sedentary Alarm - Press and hold the 'M' button until the menu appears. Navigate to the 'Bell' icon and press 'M' to activate. The user can select between '30', '40', '50', or '60' minute time intervals for the alarm to vibrate.

Upper and Lower Limit Adjustment - Move to the desired maximum or minimum height. Press and hold the 'M' button until the menu appears. Navigate to the 'Up Down Arrow' icon and press 'M' to activate. Choose either the 'Max' or 'Min' to set the intended height limit. To remove the limits, select 'Off'.